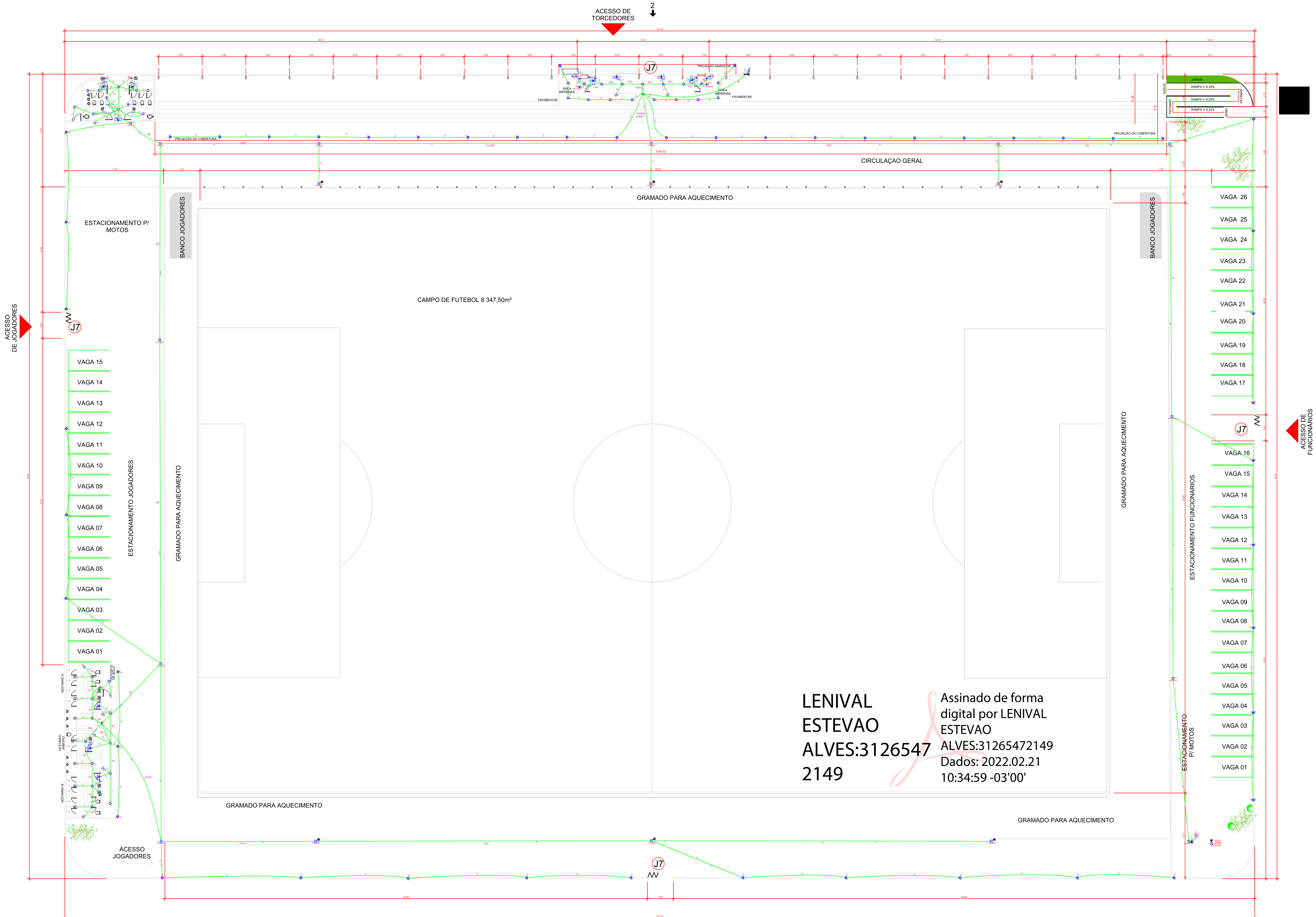

LENIVAL ESTEVAO ALVES:31265472149

Assinado de forma digital por LENIVAL ESTEVAO ALVES:31265472149
Dados: 2022.02.21 10:34:59 -03'00'

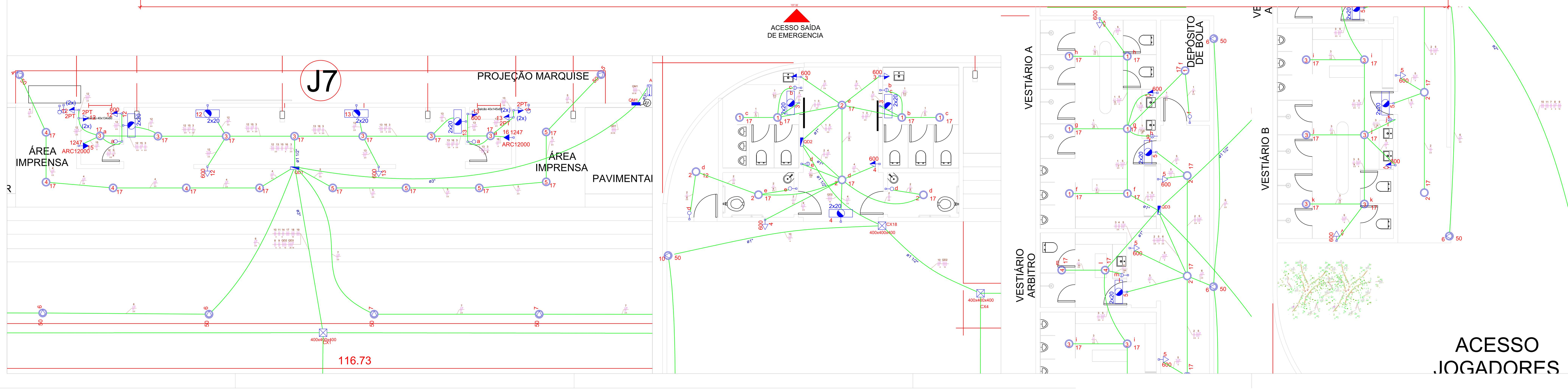

Quadro de Demanda (QM1)

Tipo de carga	Potência instalada (kVA)	Fator de demanda (%)	Demanda (kVA)
Uso específico	2.57	100	2.57
Iluminação e TUG's (Clubes e semelhantes)	17.53	100	17.53
		TOTAL	20.10

Quadro de Cargas (QD1)

Circuito	Descrição	Esquema	Método de inst.	V (V)	Ilum. 6	Ilum. 17	Ilum. 50	Ilum. 100	Tom. 600	Tom. 1247	Tom. 1500	Pot. total (VA)	Pot. total (W)	Fases	Pot. - R (W)	Pot. - S (W)	Pot. - T (W)	FCT	FCA	In' (A)	Seção (mm2)	Ic (A)	Disj (A)	dV parc (%)	dV total (%)	Status
QD2	Alim.QD2	3F+N	B1	220 / 127 V								2981	2566	R+S+T	1283	1283		1.00	0.50	0.0	10	50.0	50.0			Ok
QD3	Alim.QD3	3F+N+T	B1	220 / 127 V								3964	2791	R+S+T	1220	335	1236	1.00	0.50	12.2	25	89.0	80.0	0.88	0.88	Ok
3	Ilumin.01	F+F	B1	220 V		7						238	119	R+S	60	60		1.00	0.60	1.3	2.5	24.0	10.0	0.02	0.02	Ok
	a					2						68	34	R+S	17	17			0.80	0.0	2.5	24.0				Ok
4	Ilumin.02	F+F	B1	220 V		5	1					270	135	R+S	68	68		1.00	1.00	1.2	2.5	24.0	10.0	0.09	0.09	Ok
5	Ilumin.03	F+F	B1	220 V		5	1					270	135	R+S	68	68		1.00	1.00	1.2	2.5	24.0	10.0	0.09	0.09	Ok
6	Refletores_01	F+F+T	B1	220 V			10					1000	500	R+S	250	250		1.00	1.00	4.5	2.5	24.0	20.0	1.08	1.08	Ok
7	Refletores_02	F+F+T	B1	220 V			11					1100	550	R+S	275	275		1.00	1.00	5.0	2.5	24.0	20.0	1.28	1.28	Ok
8	Refletores_03	F+F+T	B1	220 V			4					400	200	S+T		100	100	1.00	0.50	3.6	4	32.0	20.0	0.78	0.78	Ok
9	Refletores_04	F+F+T	B1	220 V			5					500	250	R+S	125	125		1.00	0.50	4.5	6	41.0	20.0	0.88	0.88	Ok
10	Refletores_05	F+F+T	B1	220 V			3					300	150	R+T	75		75	1.00	0.50	2.7	4	32.0	20.0	0.53	0.53	Ok
11	Refletores_06	F+F+T	B1	220 V			3					300	150	R+T	75		75	1.00	0.50	2.7	4	32.0	20.0	0.60	0.60	Ok
12	Circuito_01	2F+N+T	B1	220 / 127 V	2			4	2			1845	1612	R+T	806		806	1.00	0.60	0.0	2.5	21.0	20.0			Ok
13	Circuito_02	2F+N+T	B1	220 / 127 V	2			2	2			1595	1412	R+T	706		706	1.00	0.60	0.0	2.5	21.0	20.0			Ok
14	BombaDágua	F+F+T	B1	220 V							1	2567	1500	R+T	750		750	1.00	0.50	11.7	6	41.0	32.0	3.15	3.15	Ok
15	AR_Split_01	F+F+T	B1	220 V						1		1386	1247	S+T		624	624	1.00	0.60	10.5	4	32.0	20.0	0.30	0.30	Ok
16	AR_Split_02	F+F+T	B1	220 V						1		1386	1247	S+T		624	624	1.00	0.60	10.5	4	32.0	20.0	0.30	0.30	Ok
17	Torre_01	3F	B1	220 V								0	0	R+S+T				1.00	0.50	0.0	10	50.0	40.0			Ok
18	Torre_02	3F	B1	220 V								0	0	R+S+T				1.00	0.50	0.0	10	50.0	40.0			Ok
19	Torre_03	3F	B1	220 V								0	0	R+S+T				1.00	0.50	0.0	10	50.0	40.0			Ok
TOTAL					4	17	38	6	4	2	1	20102	14564	R+S+T	5759	3810	4996									

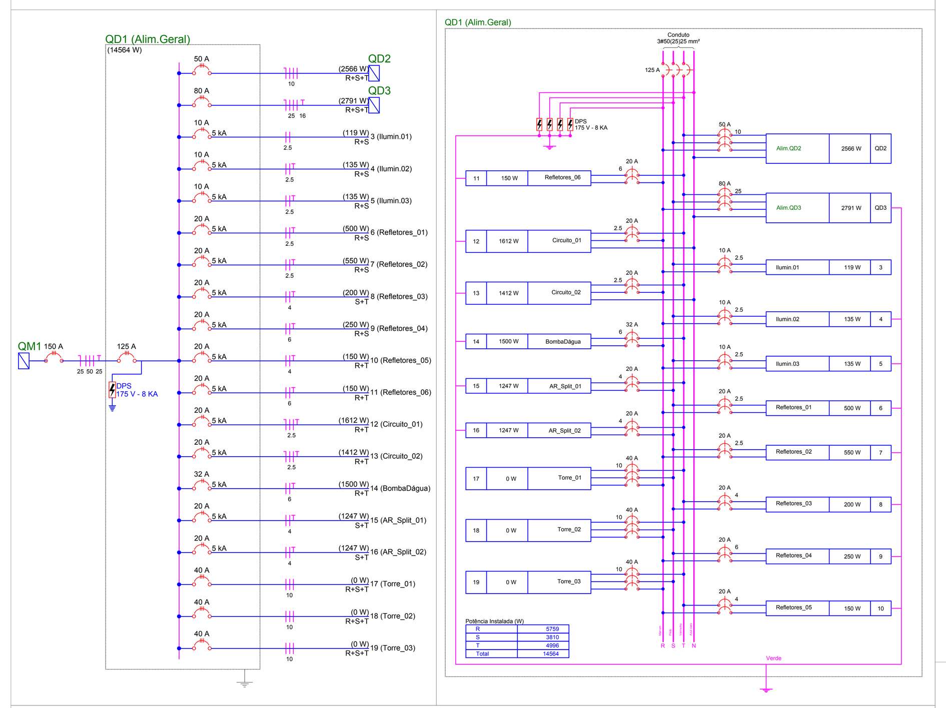

Quadro de Cargas (QD2)

Circuito	Descrição	Esquema	Método de inst.	V (V)	Ilum. 6	Ilum. 12	Ilum. 17	Tom. 600	Pot. total (VA)	Pot. total (W)	Fases	Pot. - R (W)	Pot. - S (W)	Pot. - T (W)	FCT	FCA	In' (A)	Seção (mm2)	Ic (A)	Disj (A)	dV parc (%)	dV total (%)	Status
1	Ilumin.04	F+F	B1	220 V			4		136	68	R+S	34	34		1.00	0.80	0.0	2.5	24.0	10.0			Ok
	b						2		68	34	R+S	17	17			1.00	0.0	2.5	24.0				Ok
	c						2		68	34	R+S	17	17			1.00	0.0	2.5	24.0				Ok
2	Ilumin.05	F+F	B1	220 V		1	4		160	80	R+S	40	40		1.00	0.80	0.0	2.5	24.0	10.0			Ok
	d					1	2		92	46	R+S	23	23			1.00	0.0	2.5	24.0				Ok
	e						2		68	34	R+S	17	17			1.00	0.0	2.5	24.0				Ok
3	Circuito_03	2F+N+T	B1	220 / 127 V	2			2	1345	1212	R+S	606	606		1.00	0.80	0.0	2.5	21.0	20.0			Ok
4	Circuito_04	2F+N+T	B1	220 / 127 V	1			2	1339	1206	R+S	603	603		1.00	0.80	0.0	2.5	21.0	20.0			Ok
TOTAL					3	1	8	4	2981	2566	R+S+T	1283	1283	0									

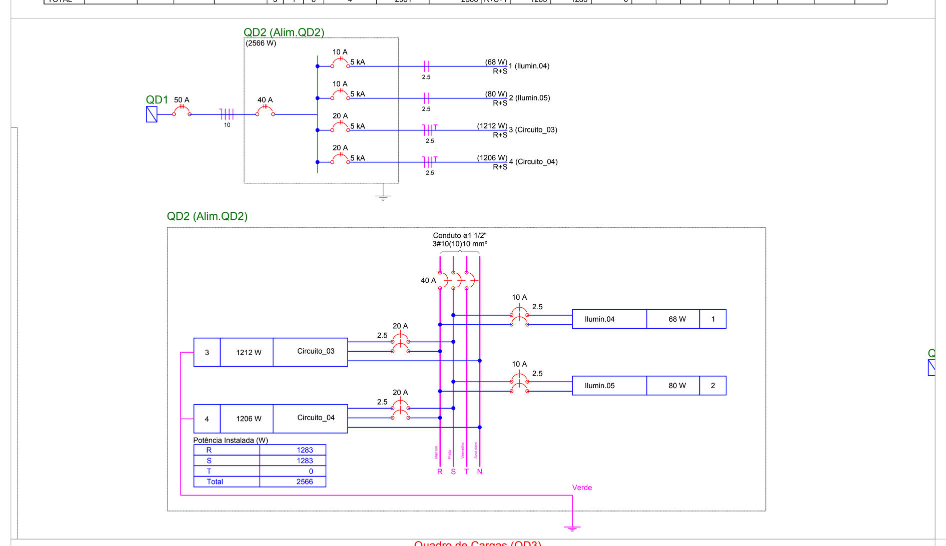

Quadro de Cargas (QD3)

Circuito	Descrição	Esquema	Método de inst.	V (V)	Ilum. 6	Ilum. 17	Ilum. 50	Tom. 600	Pot. total (VA)	Pot. total (W)	Fases	Pot. - R (W)	Pot. - S (W)	Pot. - T (W)	FCT	FCA	In' (A)	Seção (mm2)	Ic (A)	Disj (A)	dV parc (%)	dV total (%)	Status
1	Ilumin.06	F+F	B1	220 V		7			238	119	R+T	60		60	1.00	0.80	0.8	2.5	24.0	16.0	0.03	0.91	Ok
	f					3			102	51	R+T	26		26		0.80	0.0	2.5	24.0				Ok
	g					2			68	34	R+T	17		17		1.00	0.3	2.5	24.0				Ok
	h					2			68	34	R+T	17		17		0.80	0.4	2.5	24.0				Ok
2	Ilumin.07	F+F	B1	220 V		4			136	68	R+S	34	34		1.00	0.70	0.9	2.5	24.0	10.0	0.03	0.91	Ok
3	Ilumin.08	F+F	B1	220 V		6			204	102	S+T		51	51	1.00	0.70	1.3	2.5	24.0	16.0	0.08	0.96	Ok
	i					2			68	34	S+T		17	17		0.80	0.4	2.5	24.0				Ok
	j					2			68	34	S+T		17	17		1.00	0.3	2.5	24.0				Ok
	k					2			68	34	S+T		17	17		0.80	0.4	2.5	24.0				Ok
4	Ilumin.09	F+F	B1	220 V		2			68	34	R+T	17		17	1.00	0.70	0.4	2.5	24.0	10.0	0.01	0.89	Ok
	l					1			34	17	R+T	8		8		1.00	0.2	2.5	24.0				Ok
	m					1			34	17	R+T	8		8		1.00	0.2	2.5	24.0				Ok
5	Circuito_05	2F+N+T	B1	220 / 127 V	3			3	2018	1818	R+T	909		909	1.00	0.70	0.0	4	28.0	20.0		0.88	Ok
6	Refletores_07	F+F+T	B1	220 V			3		300	150	R+T	75		75	1.00	0.70	1.9	2.5	24.0	10.0	0.09	0.96	Ok
7	Refletores_08	F+F+T	B1	220 V			5		500	250	S+T		125	125	1.00	0.60	3.8	4	32.0	20.0	0.51	1.39	Ok
8	Refletores_09	F+F+T	B1	220 V			5		500	250	R+S	125	125		1.00	0.60	3.8	6	41.0	25.0	0.75	1.63	Ok
9	Torre_04	3F	B1	220 V					0	0	R+S+T				1.00	0.60	0.0	10	50.0	40.0		0.88	Ok
10	Torre_05	3F	B1	220 V					0	0	R+S+T				1.00	0.60	0.0	10	50.0	40.0		0.88	Ok
11	Torre_06	3F	B1	220 V					0	0	R+S+T				1.00	0.60	0.0	10	50.0	40.0		0.88	Ok
TOTAL					3	19	13	3	3964	2791	R+S+T	1220	335	1236									

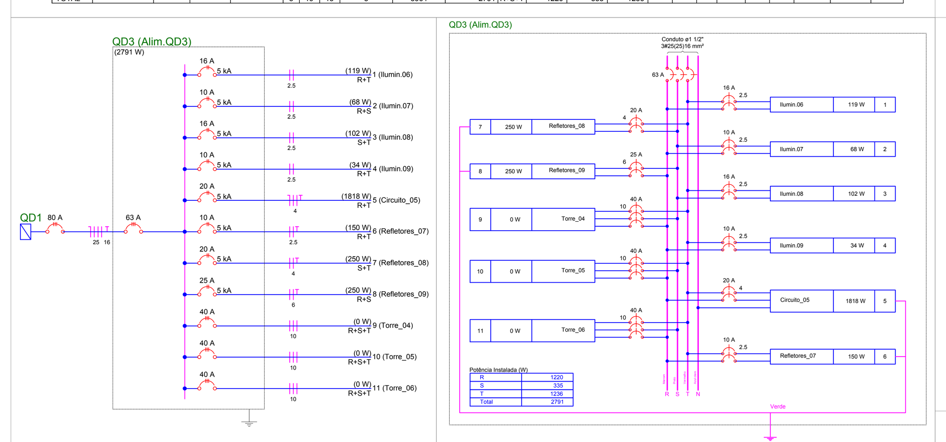

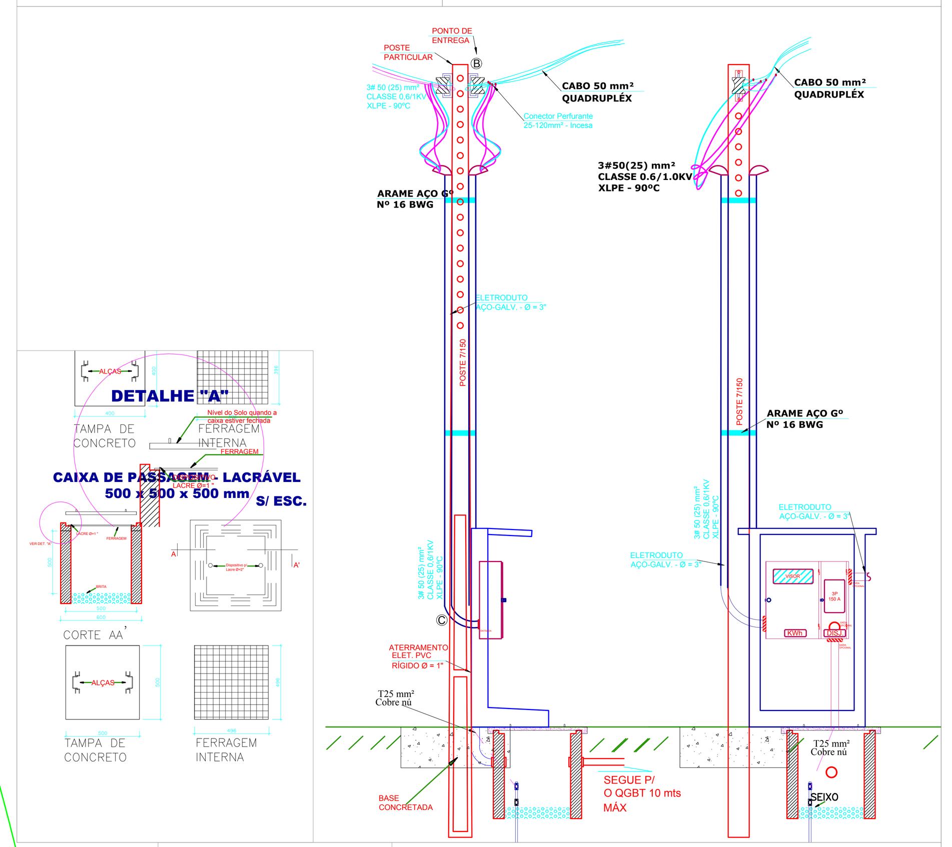

PREFEITURA:

PROJETO de REDE de DISTRIBUIÇÃO INTERNA de ENERGIA ELÉTRICA
ESTÁDIO MUNICIPAL -

PROPRIETÁRIO:
PREFEITURA MUNICIPAL DE REDENÇÃO-PA
CNPJ:

LOCALIZAÇÃO:
RUA ANDRADINA QD. 57
S/Nº - SETOR ALTO PARANÁ

PRANCHA: 03/03

POSIÇÃO DO PROJETO:
A EXECUTAR:
EXECUTADO:

DATA:	ESCALA:	DESENHO:	DATA ÚLTIMA ATUALIZAÇÃO:
FEVEREIRO / 2019	1 / 75	MARCIO ANDREI	JUL/2019